Eclisse White

IP20

DESIGN BY

Vico Magistretti

DESCRIPTION

Materials: painted metal. Wall mounting possibility.

TECHNICAL DRAWINGS

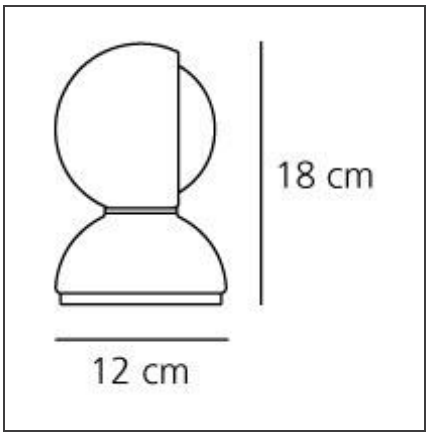

FEATURES

Article Code:	0028010A	**Material:**	steel, technopolymer
Colour:	White	**Series:**	Design,
Installation:	Table	**Area contract:**	Modern Classic
Environment:	Indoor	**Emission:**	Residential Diffused And Direct

DIMENSIONS

Height:	cm 18	**Impact Resistance:**	N/D
Base Diameter:	cm 12	**Glow Wire Test:**	850

NOT INCLUDED SOURCES

Category:	HALO	**Class:**	A
Number:	1		
Watt:	25W		
Socket:	E14		

ALTERNATIVE SOURCES

Category:	LED
Number:	1
Watt:	4W
Delivered lumens output (lm):	370lm
Type:	2
Socket:	E14
Class:	A

LUMINAIRE

Watt:	25W	**Delivered lumens output (lm):**	170lm
Voltage:	220V-240V	**CCT:**	2800K
		Dimmer Typology:	-
		Dimmable Typology:	-